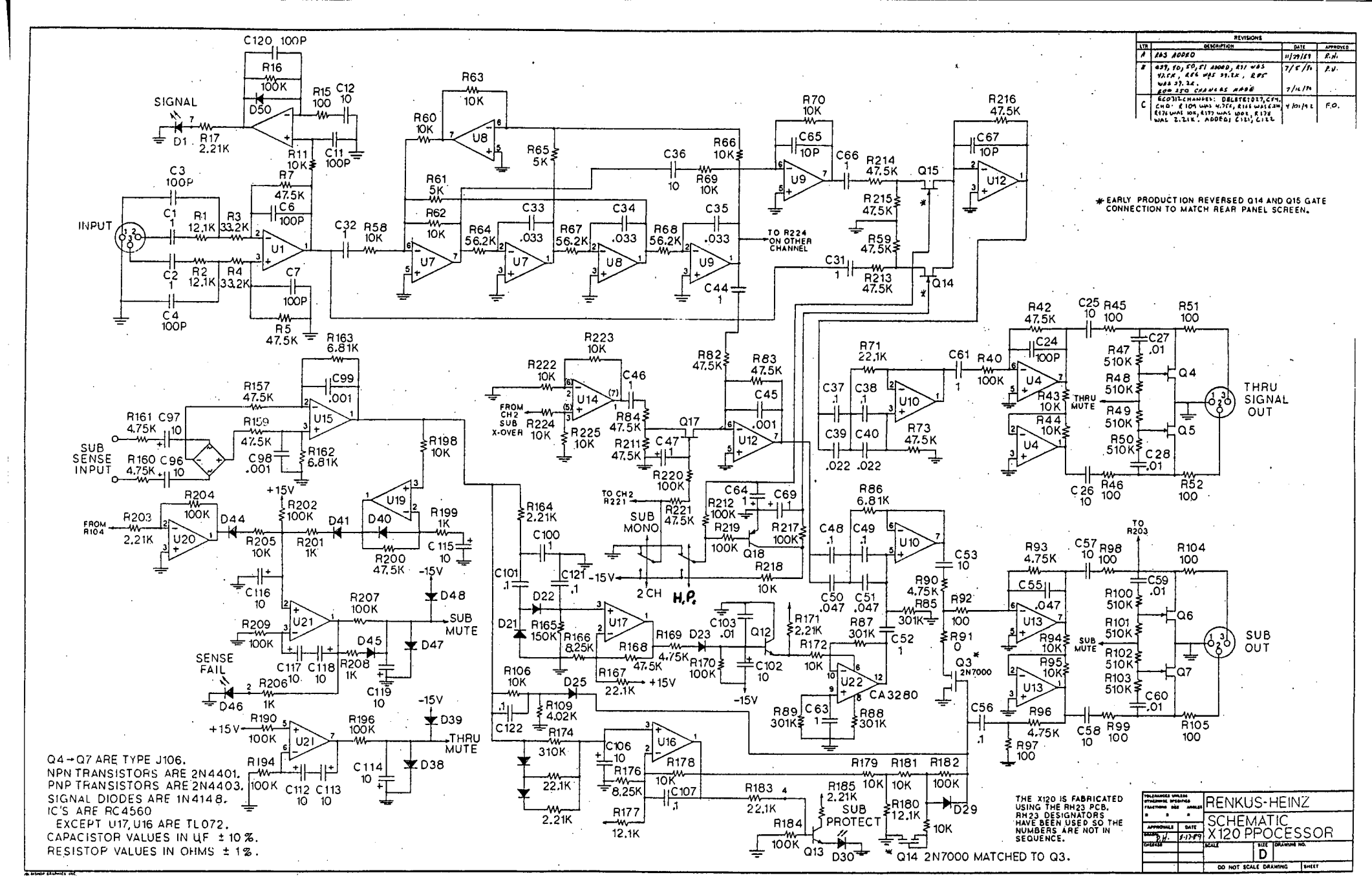

REVISIONS
LTR | DESCRIPTION | DATE | APPROVED
A | R63 ADDED | 11/29/89 | R.H.
B | C39, 40, 50, 51 ADDED, R31 WAS 47.5K, R56 WAS 39.2K, R85 WAS 39.2K. ROW 250 CHANGES MADE | 7/5/90 | R.V.
C | ECO312 CHANGES: DELETE: D27, C54, CHD: R109 WAS 4.75K, R166 WAS 6.81K, R176 WAS 10K, R177 WAS 100K, R178 WAS 2.21K. ADDED: C121, C122 | 4/01/92 | F.O.
SIGNAL
INPUT
SUB SENSE INPUT
SENSE FAIL
THRU SIGNAL OUT
SUB OUT
SUB MUTE
THRU MUTE
SUB MONO
2 CH
H.P.
SUB PROTECT
TO R224 ON OTHER CHANNEL
TO CH2 R221
FROM CH2 SUB X-OVER
FROM R104
TO R203
CA3280
Q3 2N7000
* EARLY PRODUCTION REVERSED Q14 AND Q15 GATE CONNECTION TO MATCH REAR PANEL SCREEN.
Q4→Q7 ARE TYPE J106.
NPN TRANSISTORS ARE 2N4401.
PNP TRANSISTORS ARE 2N4403.
SIGNAL DIODES ARE 1N4148.
IC'S ARE RC4560
EXCEPT U17, U16 ARE TL072.
CAPACISTOR VALUES IN UF ± 10%.
RESISTOR VALUES IN OHMS ± 1%.
THE X120 IS FABRICATED USING THE RH23 PCB. RH23 DESIGNATORS HAVE BEEN USED SO THE NUMBERS ARE NOT IN SEQUENCE.
* Q14 2N7000 MATCHED TO Q3.
RENKUS-HEINZ
SCHEMATIC X120 PPOCESSOR
D
DO NOT SCALE DRAWING