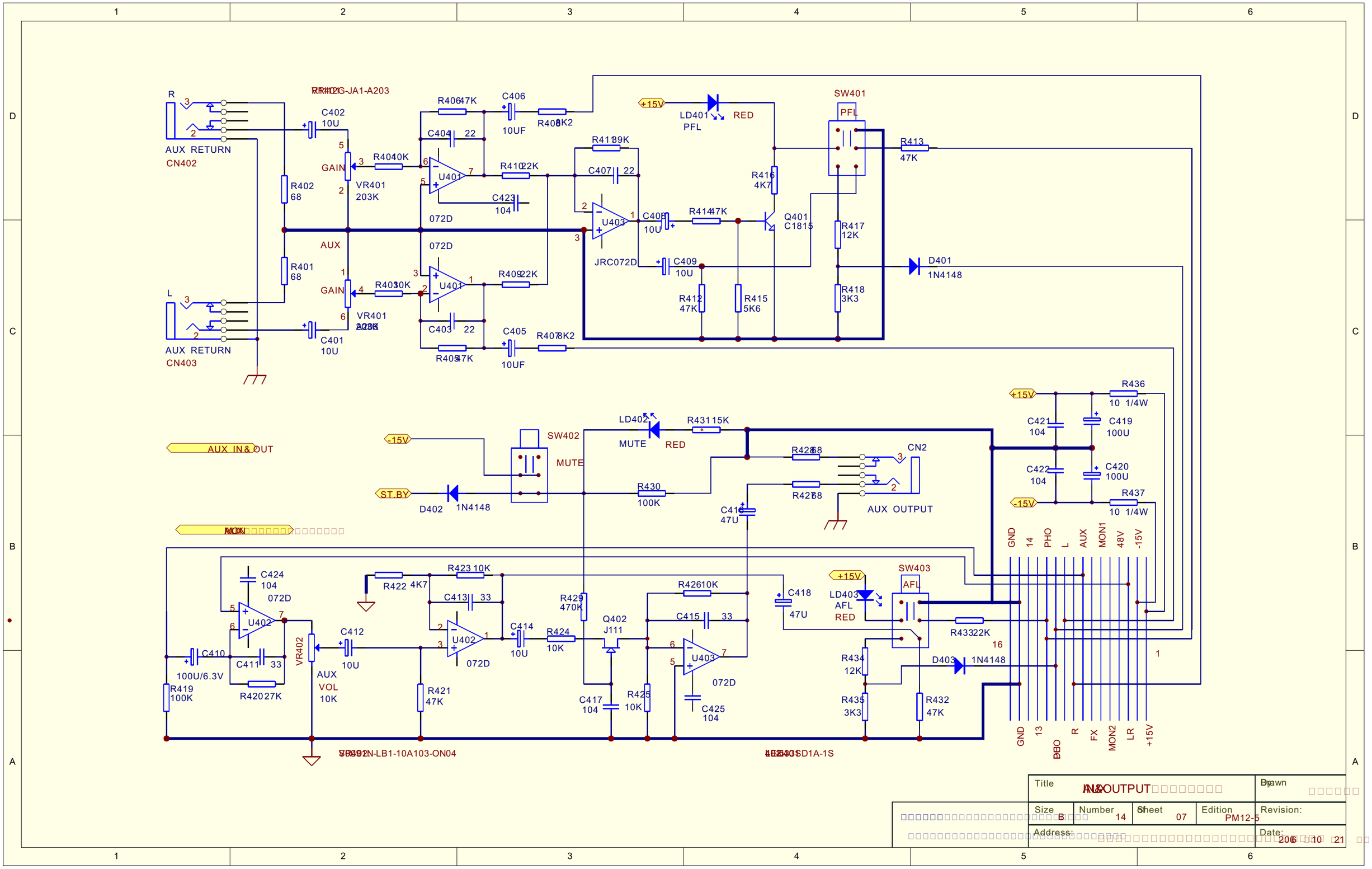

Title	AUX OUTPUT			Drawn
Size B	Number 14	Sheet 07	Edition PM12-5	Revision:
Address:				Date: 2006 10 21